BIERI
HYDAC INTERNATIONAL

Seated valve bidirectional

Type WVM-4B-Bi

NG 4
up to 12 l/min

Features

- Bidirectional (flow of fluid in both directions, independently of pressure prof)
- Low pressure drop
- Direct operated
- Leakage free
- Good resistance to corrosion
- As 2/2-, 3/2-valve with solenoid or alternative actuation

Design

- With hardened closing elements as cone seat
- Solenoids with slide on coil technology
- Mounting on single subplate (EAP) as stand-alone valve or in valve bank with supplate (APH)

Applications

- Controlling of cylinders and motors in higher pressure ranges as full replacement for spool valve technology (especially for leakage free holding, bending and clamping)
- In machine tools, hoisting technology, test stands and rescue devices
- Power units (e.g. as with limited space conditions or weight reduction)
- Use of high viscosity fluids and grease
- Use in lubrication systems

Technical data

Hydraulic fluid	Mineral oil according to DIN 51524 / Grease according to class NLGI 2
Fluid temperature range	-25 to 80 °C (down to -40°C on Request)
Ambient temperature range	-25 to 50 °C (down to -40°C on Request)
Viscosity range	from 5 mm^2/s to class NLGI 2
Porting	NG 4
Max. operating pressure	700 bar continuous pressure (S1)
Duty cycle DC	100% (at continuous pressure operation)
Max. flow rate / mass flow	12 l/min (Grease: approx. 2.5 kg/min)
Filtration (recommendation)	According NAS 1638 class 6 resp. ISO/DIN 4406 17/15/12
DIN connector (2P + E)	According EN 175301-803 / ISO 4400 / DIN 43650
Power	24 VDC (23 W) / 110 VAC (25 W) / 230 VAC (25 W)
Power tolerance	+/- 10%
Switching time	40 - 120 ms (depending on viscosity)
Degree of protection according DIN 40050	IP 65
Material	Corrosion-resistant steel and aluminium (coil housing: ZnFe - corrosion protection)

Ordering codes WVM, APH and EAP

Example WVM

WV	M	-	4B	-	2	/	2	-	WS	-	24	-	BI	-	V	-	A		00

Seated valve		
Type	500+	
Nominal size **Connection Bieri**	4 .. .. B	
Ports	2 or 3	
Positions	2	
Functions	see product information valve types	
Actuator types	24 110 230	solenoid 24 VDC solenoid 110 VAC solenoid 230 VAC
Technical design	bidirectional	
Seal material	V	[FPM] / other seal materials on request

Special design
01 ... 99
(00 for standard)

Part index
Please leave blank (small letters a-z; defferent letters do not effect inter-changeability)

Desing revision
Capital letters A-Z; iden-tical letters equal same connecting dimensions

Example APH

APH	-	4B	-	2	/	2	-	AT	-	G1/4	-	V	-	A		00

Subplate		
Nominal size **Porting**	4 .. .. B	
Ports	2 or 3	
Positions	2	
Internal connection	PA AT PT X	P - A (2/2-valve) A - T (2/2-valve) P - T (2/2-valve) for 3/2
Threaded connections (in-line body)	G1/4 G3/8 X	G 1/4“ G 3/8“ no external port for P - T
Seal material	V other seal materials on request	[FPM]

Special design
01 ... 99
(00 for standard)

Part index
Please leave blank (small letters a-z; deffe-rent letters do not effect interchangeability)

Desing revision
Capital letters A-Z; identical letters equal same connecting dimensions

Example EAP

EAP	-	4B	-	2	/	2	-	G1/2	-	A		00

Single Subplate

Nominal size 4 ..
Porting .. B

Ports 2 or 3

Positions 2

Threaded connections
G1/4 G 1/4“ port
G3/8 G 3/8“ port
G1/2 G 1/2“ port

Special design
01 ... 99
(00 for standard)

Part index
Please leave blank (small letters a-z; defferent letters do not effect inter-changeability)

Desing revision
Capital letters A-Z; identical letters equal same connecting dimensions

Spare parts set WVM

	Description	Part No.
5 pcs.	O-Ring, 5x1,5 mm, FPM	
5 pcs.	O-Ring, 8x1,5 mm, FPM	4091040
4 pcs.	Fixing screw, M6x35 mm	

Solenoid	Part No.
Solenoid 24 VDC	3546095
Solenoid 110 VAC	3547372
Solenoid 230 VAC	3547373
Plastic nut	4006061
O-Ring for plastic nut	4006140

Accessories (optional)

Valve type	Item description	Part No.
All types	Connector for solenoid (black)	3728850

Type	Valve type	Item description	Part No.
Einsteckblende Ø 0,4	All types	Einsteckblende für T	4002279
Einsteckblende Ø 0,5	All types	Einsteckblende für T	4002353
Einsteckblende Ø 0,6	All types	Einsteckblende für T	4002354
Einsteckblende Ø 0,7	All types	Einsteckblende für T	4002355
Einsteckblende Ø 0,8	All types	Einsteckblende für T	4002356
Einsteckblende Ø 1,0	All types	Einsteckblende für T	4002357

Dimensional drawing

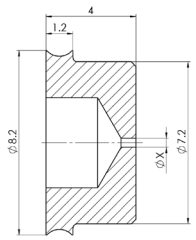

Hydraulic schematics

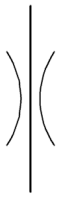

Product information 2/2-valve

Functions WO and WS

Actuator type	Part No. 2/2-WO	Weight ca. [kg]	Part No. 2/2-WS
Solenoid 24 VDC	4002620	0,85	4002624
Solenoid 110 VAC	4014031	0,85	4014033
Solenoid 230 VAC	4002891	0,85	4014034

Note: Characteristics see page 12

Dimensional drawing (solenoid operated)

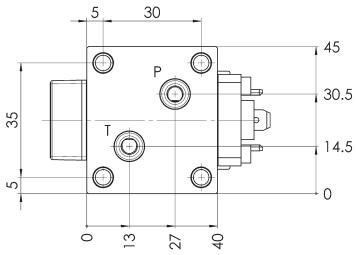

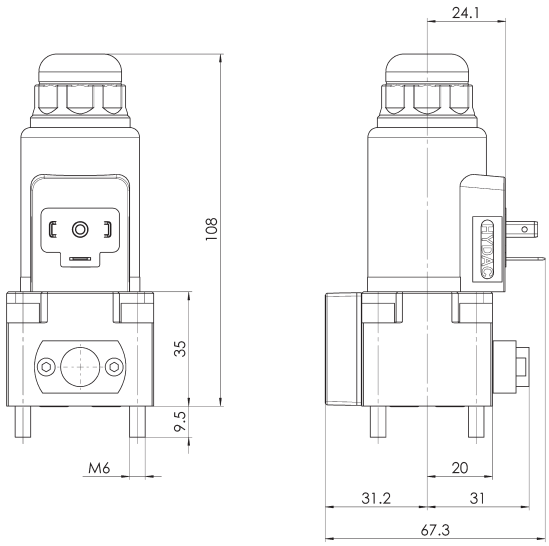

Hydraulic schematics

2/2-WO

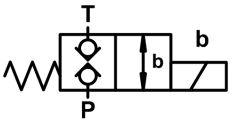

2/2-WS

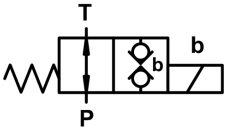

Hole pattern 2/2-Valve

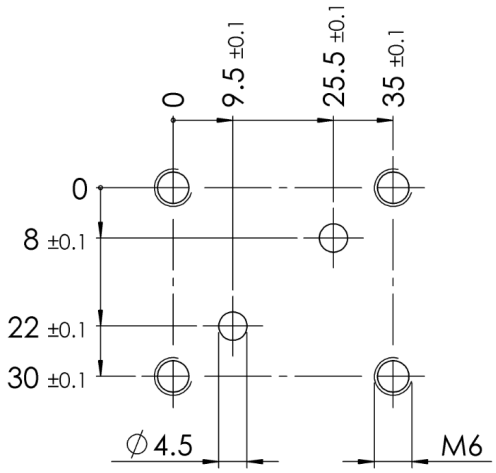

Subplates APH for 2/2-valve (valve bank - example see page 11)

Internal connection	Threaded connection Dim. G* [”]	Dim. H* [mm]	Dim. D* Ø [mm]	Weight ca. [kg]	Part No.
P - A	G 1/4	15	25	0,35	3832459
P - A	G 3/8	14	28	0,35	3832460
A - T	G 1/4	15	25	0,35	3832457
A - T	G 3/8	14	28	0,35	3832458
P - T				0,35	3832461

* see drawings below

Attention: Mounting elements for APH have to be ordered seperately (see page 10)!

Note: For additional functions in subplates APH see data sheets size 500+ (ERVM, etc.)

Hydraulic schematics

P - A

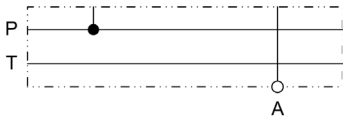

A - T

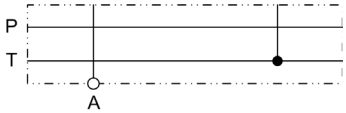

P - T

Dimensional drawings

P - A

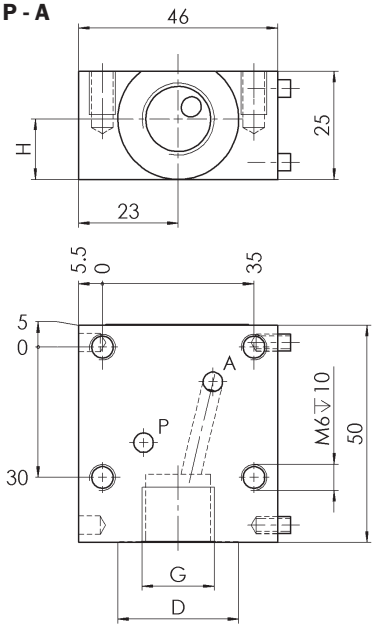

A - T

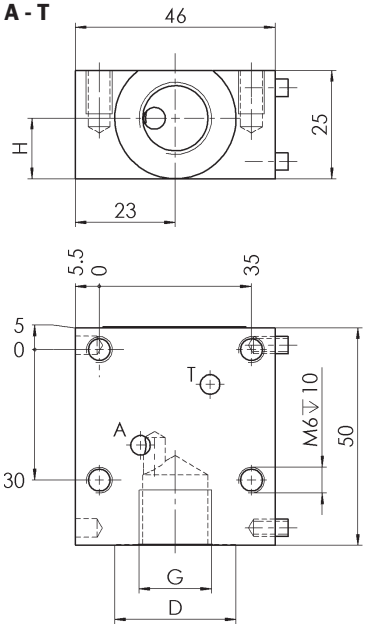

P - T

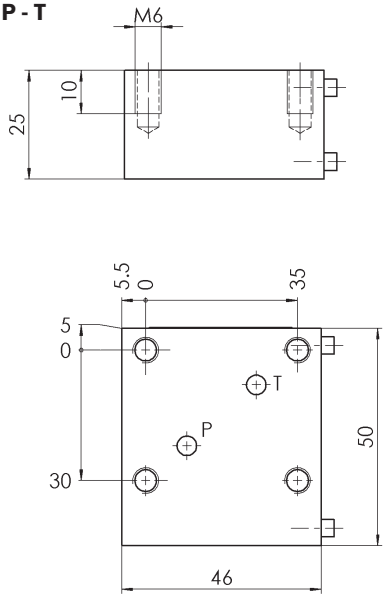

Single subplates EAP for 2/2-valve (in-line mounting)

Threaded connection Dim. G [”]	Weight ca. [kg]	Part No.
G 1/4	0,45	3763413
G 3/8	0,45	3807978
G 1/2	0,75	3832462

Hydraulic schematics

Dimensional drawings

G 1/4“

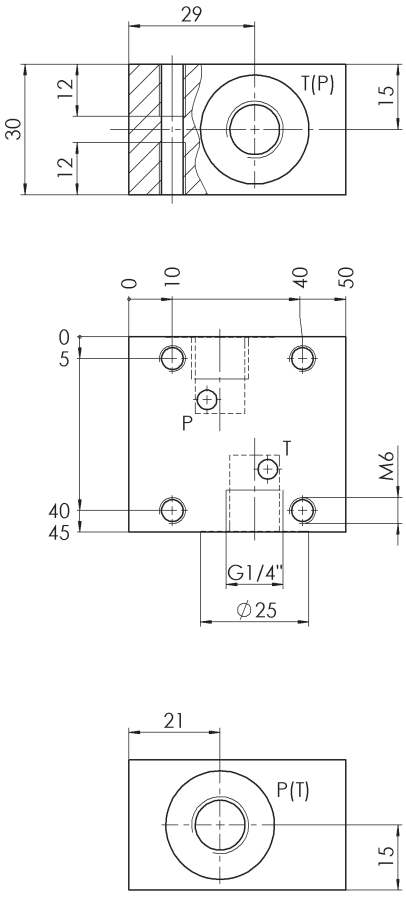

G 3/8“

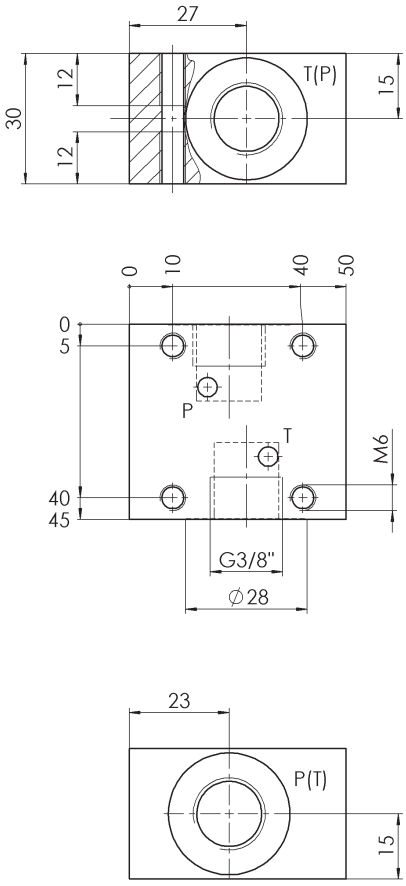

G 1/2“

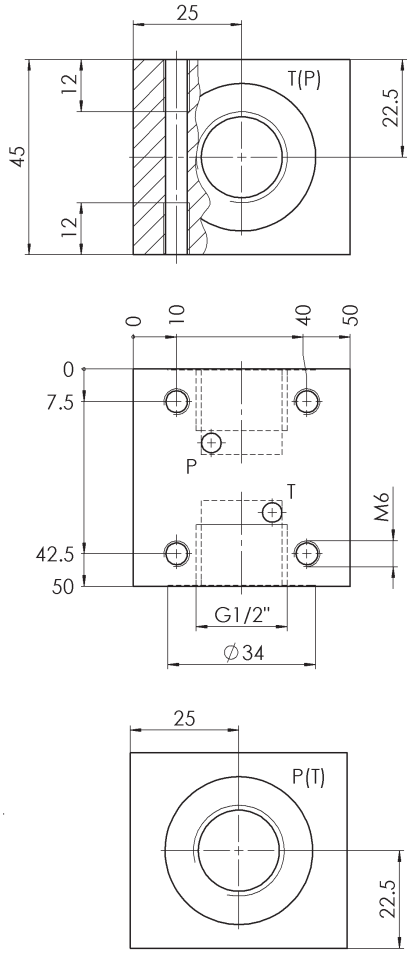

Product information 3/2-valve

Functions N and L (negative overlap)

Actuator type	Weight ca. [kg]	Part No. 3/2-NL
Solenoid 24 VDC	0,85	4002628
Solenoid 110 VAC	0,85	4014048
Solenoid 230 VAC	0,85	4002892

Note: Characteristics see page 12

Hydraulic schematics

3/2-N

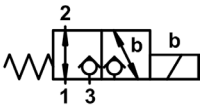

3/2-L

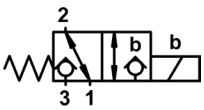

Attention: Valve body needs to be turned 180° to change over switching position N or L

- To achieve function „**L**“, connection **3** (valve side) must be mounted to **P** (connecting plate), respectively connection **1** (valve) to **T** (plate)

- To achieve function „**N**“, connection **1** (valve side) must be mounted to **P** (connecting plate), respectively connection **3** (valve) to **T** (plate)

Dimensional drawing (solenoid operated)

N

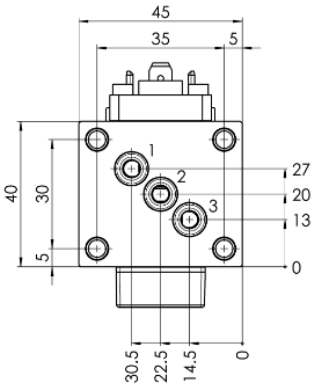

L

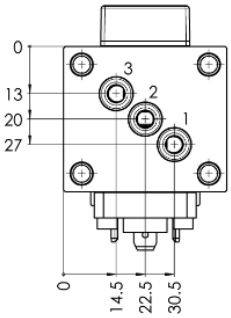

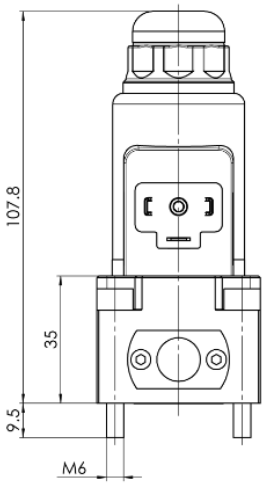

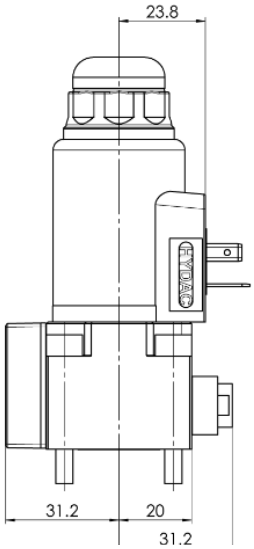

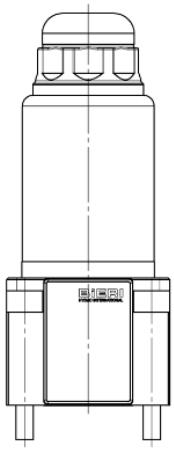

Hole pattern 3/2-Valve

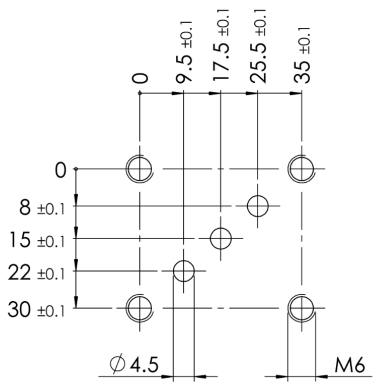

Subplates APH for 3/2-valve (valve bank - example see page 11)

Threaded connection Dim. G* [”]	Dim. H* [mm]	Dim. D* Ø [mm]	Weight ca. [kg]	Part No.
G 1/4	15	25	0,35	3832495
G 3/8	14	28	0,35	3832496

* see drawing below

Attention: Mounting elements for APH have to be ordered seperately (see page 10)!
Note: For additional functions in subplates APH see data sheets size 500+ (ERVM, etc.)

Hydraulic schematics

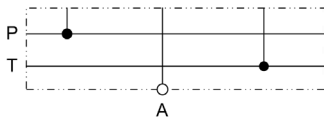

Dimensional drawing

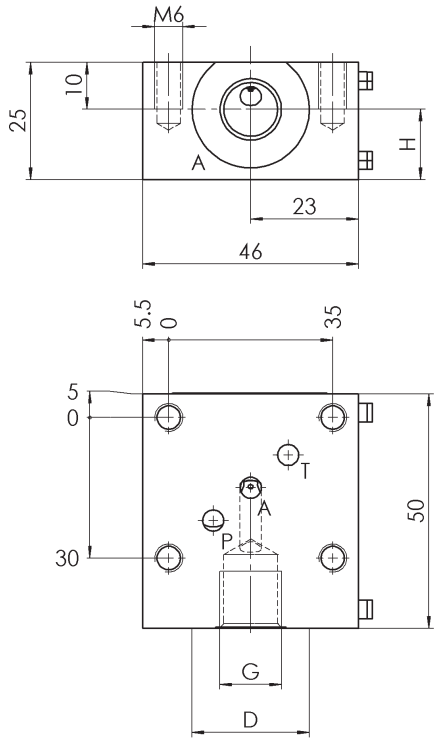

Single subplates EAP for 3/2-valve (in-line mounting)

Threaded connection Dim. G [”]	Weight ca. [kg]	Part No.
G 1/4	0,45	3832498
G 3/8	0,45	3832499
G 1/2	0,70	3832497

Hydraulic schematics

Dimensional drawings

G 1/4“

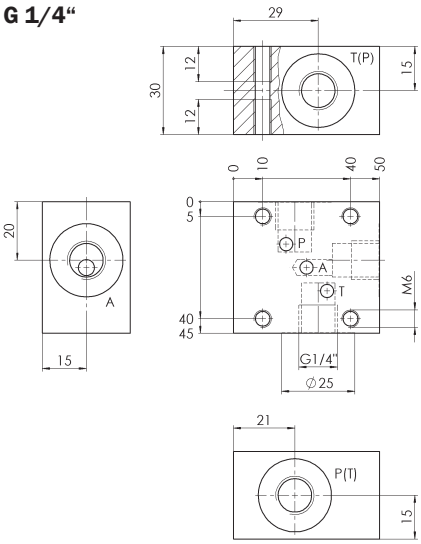

G 3/8“

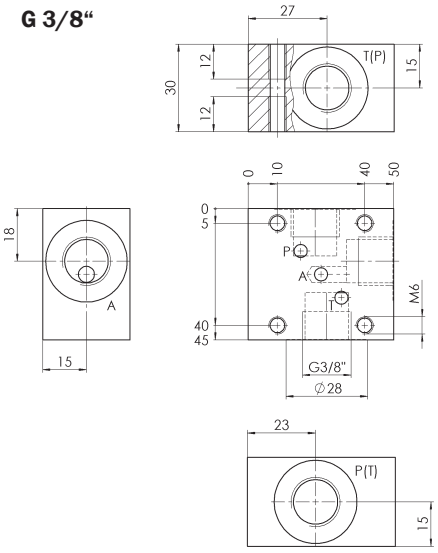

G 1/2“

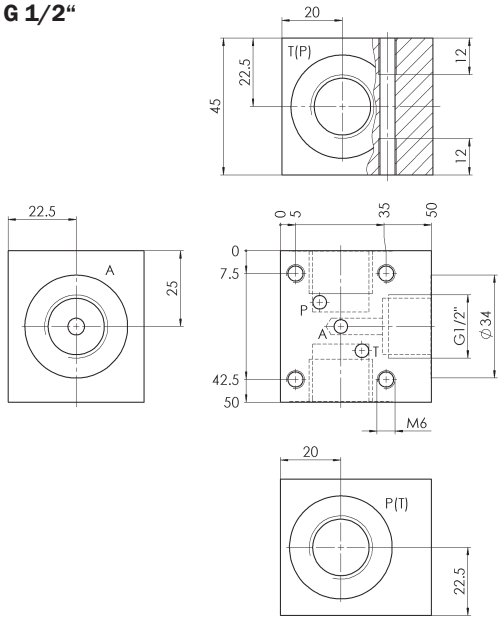

Valve bank (example see following page)

Mounting elements to subplates APH

Item description	Dimensions	Weight ca. [kg]	Part No.
End plate	see dimensional drawing below	0,10	4133564
Tie bolt	see dimensional table below	see dimensional table below	see dimensional table below
Cap nut	see dimensional drawing below	-	4006548
Usit-ring	10,35 x 16 x 2 mm	-	6116776

Note: For additional controlfunctions in subplate „starting block“ see data sheets size 500+ (DVM, AVM, etc.)

Dimensional drawings

End plate

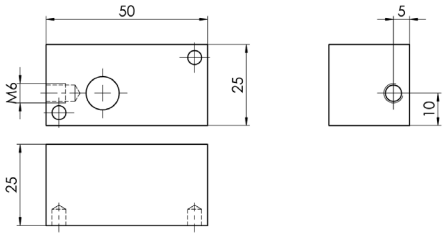

Tie bolt

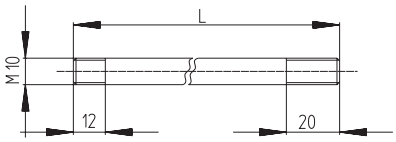

Subplate „starting block“ / without connection for pressure relief valve

„Starting block“ with pressure relief: see data sheet page 4! „Starting block“ is always required!

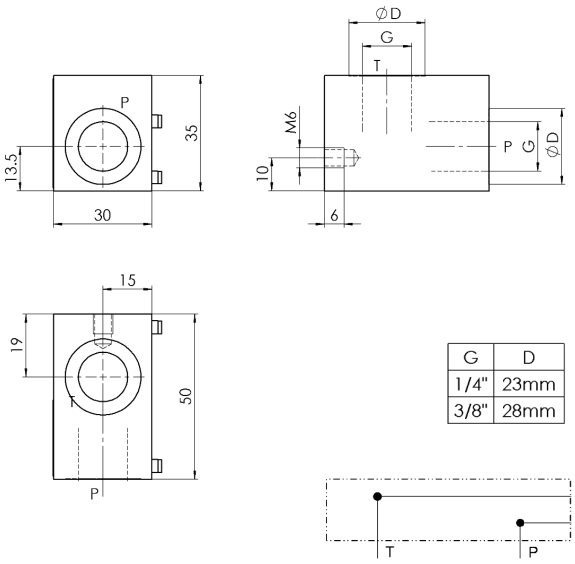

G	D
1/4"	23mm
3/8"	28mm

Dimensional table tie bolts

Number of sections [section length = 46 mm]	Length [mm]	Part No.	Weight ca. [kg]
1	101	4133634	0,05
2	147	4133689	0,08
3	193	4133692	0,10
4	239	4133781	0,13
5	285	4133823	0,16
6	331	4133861	0,20
7	377	4133906	0,22
8	423	4133907	0,25
9	469	4133909	0,28
10	515	4133913	0,31

Note: Tie bolt need a special length when an end plate with a shut-off valve will be assembled (see data sheet AVM page 4)!

Cap nut

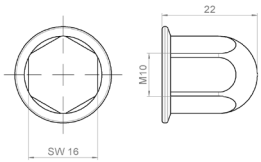

Usit-ring

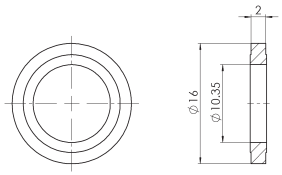

Example valve bank

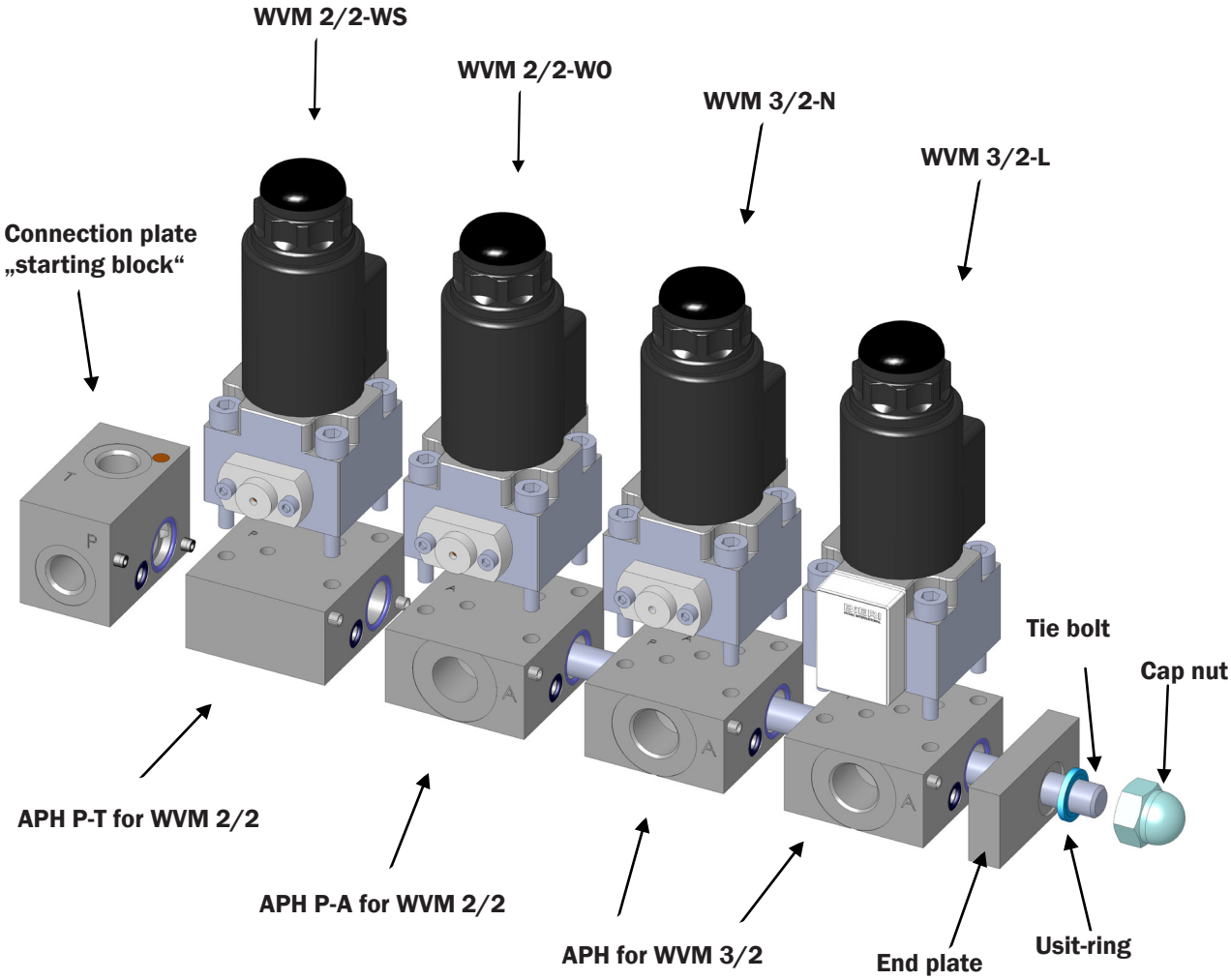

Characteristics

Pressure drop

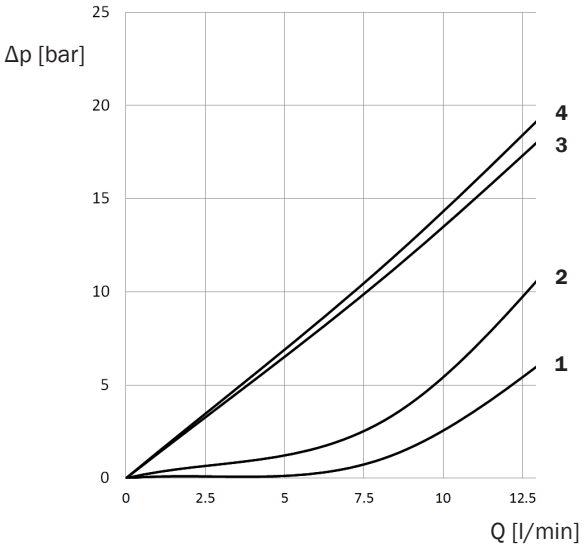

Function	P - A	A - P	A - T	T - A	P - T	T - P
3/2-NL	2	4	3	2		
2/2-WO					1	1
2/2-WS					1	1

Hydraulic operating powerlimits

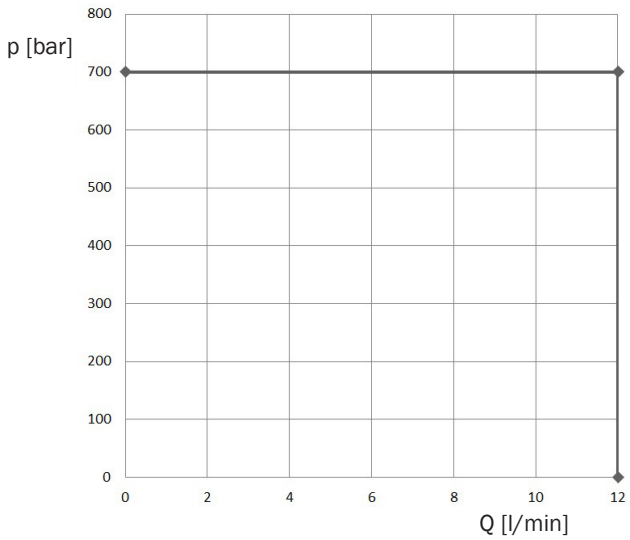

Hydraulic operating powerlimits at rated voltage and ambient temperature $T_a = 50°$ C.

NL, WO, WS

Bieri Hydraulik AG
Könizstrasse 274
CH-3097 Liebefeld
Tel. +41 31 970 09 09 | Fax +41 31 970 09 10
info@bierihydraulics.com | www.bierihydraulics.com

The information in this brochure relates to the operating conditions and applications described.
For applications and operating conditions not described, please contact the relevant technical department.
Subject to technical modifications.